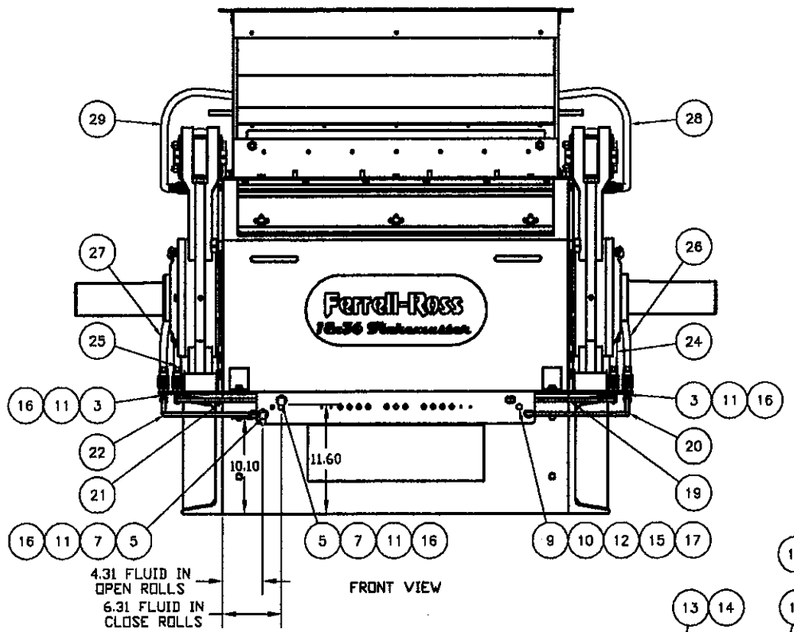

FRONT VIEW

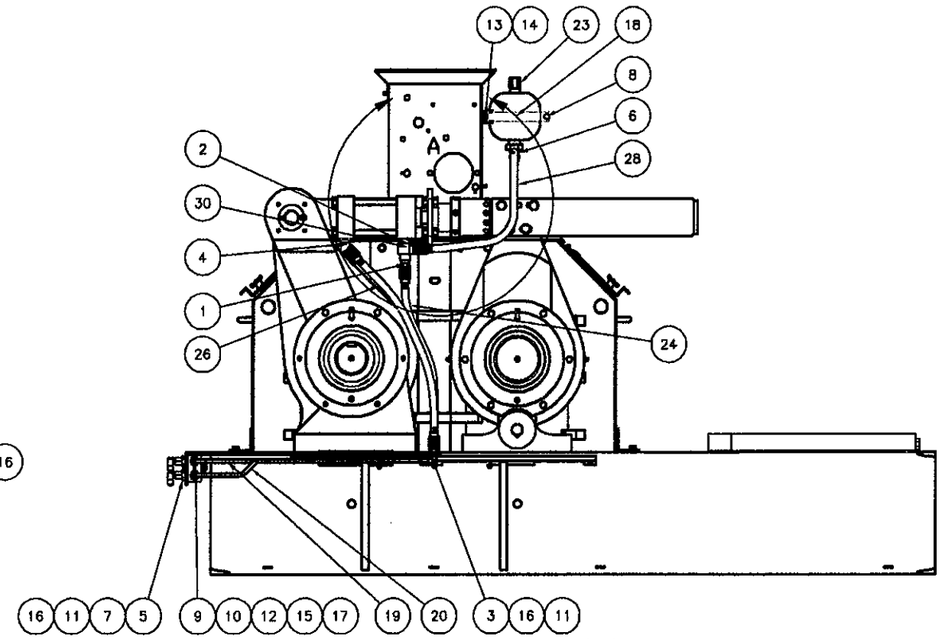

RIGHT SIDE VIEW

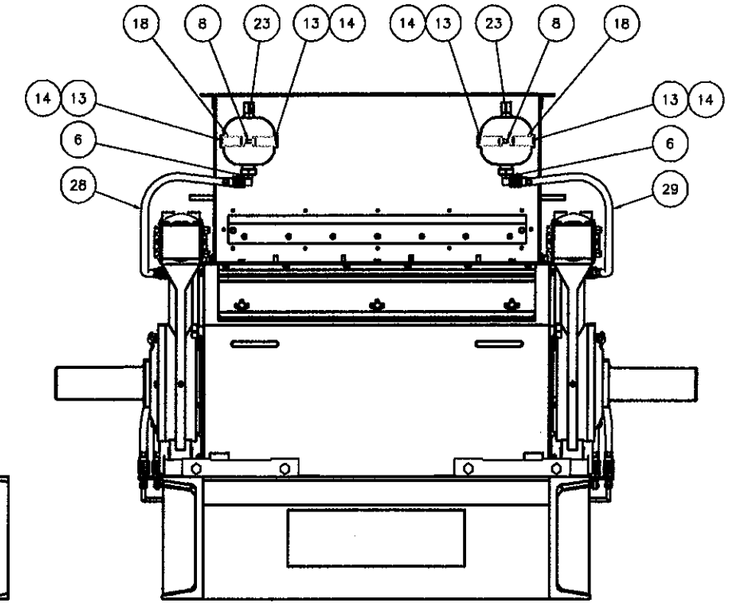

REAR VIEW

HYDRAULIC SYSTEM AIR BLEED PROCEDURE:

1. CLOSE ROLLS & LOOSEN AIR BLEED SCREW ON HYDRAULIC CYLINDERS ROD END. DO NOT REMOVE SCREW, LOOSEN ONLY ENOUGH TO BREAK SEAL. TIGHTEN BLEED SCREW.

2. OPEN ROLLS & REPEAT #1 FOR HYDRAULIC CYLINDERS HEAD END AIR BLEED SCREW.

3. REPEAT #1 & 2 UNTIL ALL AIR IS REMOVED FROM SYSTEM.

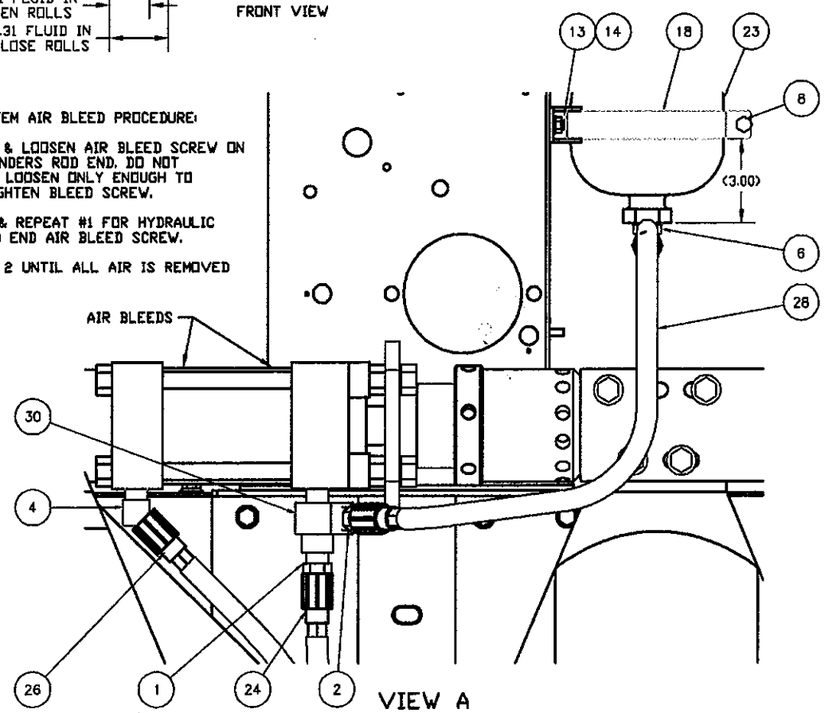

VIEW A

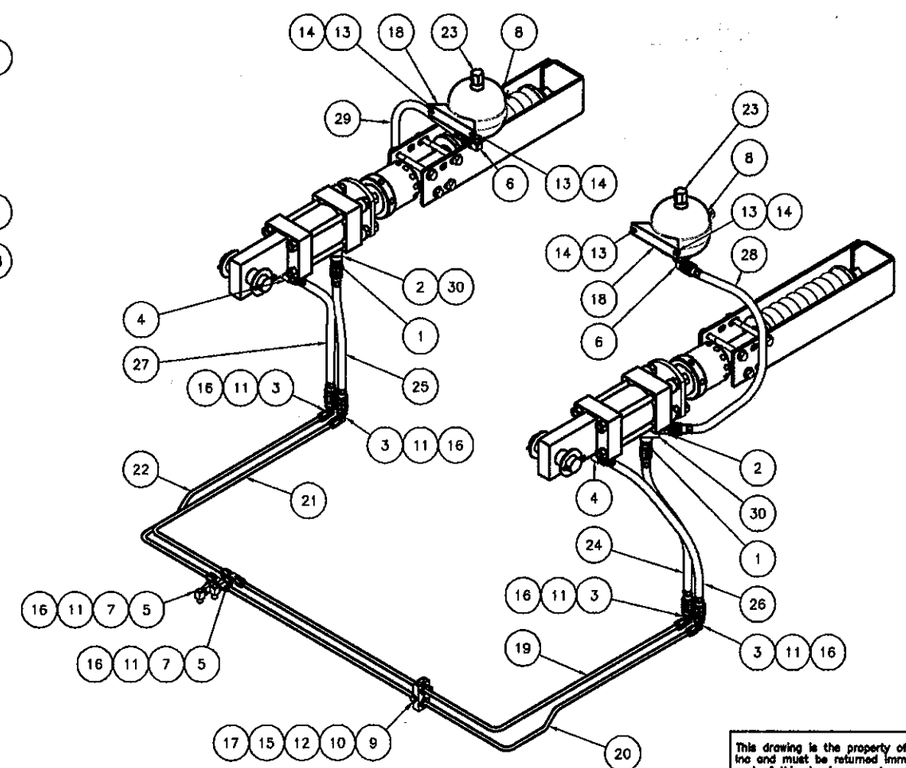

	Item	PART NUMBER	Qty	DESCRIPTION
	30	K909-28801	2	TEE, BHD .50 5602-8-8-8
A	29	K909-20551	1	HOSE, HYDR 8CIT-8FJX 24.00"
A	28	K909-20551	1	HOSE, HYDR 8CIT-8FJX 24.00"
	27	K909-18901	1	HOSE, HYDR 6CIT-6FJX 25.00"
	26	K909-18901	1	HOSE, HYDR 6CIT-6FJX 25.00"
	25	K909-18701	1	HOSE, HYDR 6CIT-6FJX 22.00"
	24	K909-18701	1	HOSE, HYDR 6CIT-6FJX 22.00"
	23	K909-01701	2	ACC, HYDAC, B0200-1E4-1125-21-OCK
	22	K200-00716	1	HYDR TBG, LH LWR, RH 18"
	21	K200-00715	1	HYDR TBG, UPPER SHORT 18"
	20	K200-00712	1	HYDR TBG, RH LWR, RH 18X36"
	19	K200-00711	1	HYDR TBG, UPPER LONG 18X36"
	18	K200-00078	2	BRACKET, ACCUMULATOR 5.75"
	17	80000510	2	BSHG. SPLIT RBBR. .38 X .88 X 1.25"
	16	70011004	6	WASHER, FLAT 1/2", TYPE A, SERIES N .09" THICK
	15	70001017	2	CLAMP, HYD LINE 1.50"
	14	67123800	4	WASHER, LOCK 5/16" T304 SS
	13	67063800	4	NUT, HEX 5/16-18 T304 SS
	12	66444400	1	WASHER, LOCK 3/8" PLT
	11	66105900	6	NUT, HEX JAM 5/8-18 PLT
	10	66084400	1	NUT, HEX 3/8-16 PLT
	9	62584435	1	HHCS, 3/8-16 X 2.25"
	8	62583826	2	HHCS 5/16-18 X 1.25"
	7	53066155	2	ELL, 90° .38 RASC-2000-6
A	6	53065156	2	ELL, 90° M .50" X 3/4-16 W/O-RING
	5	53060006	2	TEE, BHD M .38 AC3209-6
	4	53059036	2	ELL, 45° M .38X.50 AC4500-6-8
	3	53057006	4	ELL, 90° M BHD .38 AC2209-6
	2	53053041	2	ADPTR, M .50X.50 AC1000-8-8
	1	53053036	2	ADPTR, M .38X.50 AC1000-6-8

NOTES:
1: DO NOT SCALE FROM DRAWING.
2: ONE PIECE REQUIRED PER K000-00184: ROLLER MILL RH 18 X 36" DUAL DRIVE
3: APPLY PIPE TAPE TO ALL MALE FITTINGS.
4: 66105900: NUT, HEX JAM 5/8-18 PLT, INCLUDED WITH FITTINGS 53057006 & 53060006.
5: NITROGEN PRE-CHARGE ACCUMULATORS TO 1000 PSI [70.31 kg/sq cm].

REV	REV NO	DATE	DESCRIPTION OF CHANGE	APPD
A	M030046	7/9/03	REV-AD ENGINEER SH: AE H 30 X K00-18 K00-00184 DWG CHANGE: MAKE TUBE AND HOSE-2000 CONV/B	
—	M010133	4/3/02	RELEASE K000-00	

CAD
NO MANUAL CHANGES

TOLERANCES (EXCEPT AS NOTED)
DECIMAL: .XX ± .005 .XXX ± .005
FRACTIONAL: ± 1/32
ANGULAR: ± 1/2°

Ferrell-Ross
SINCE 1847
A DIVISION OF A.T. FERRELL COMPANY BLUFFTON, INDIANA, U.S.A.

FINISH: NONE
SCALE: 1/8
DRAWN BY: DJ
APPROVED BY:
DRAWING TITLE: HYDRAULIC ASSY, RH 18 X 36"
DATE: 7/14/03
SIZE: D
DRAWING NO.: K100-00723
SHEET: 1 of 1

This drawing is the property of the A.T. Ferrell Company, Inc and must be returned immediatly upon request. No part of this drawing may be reproduced, stored in a retrieval system or transmitted in any form or by any means, without prior written consent of the A.T. Ferrell Company, Inc