ATTN: DENNIS
FAX: 260-824-5463

MIX-MILL,® INC.

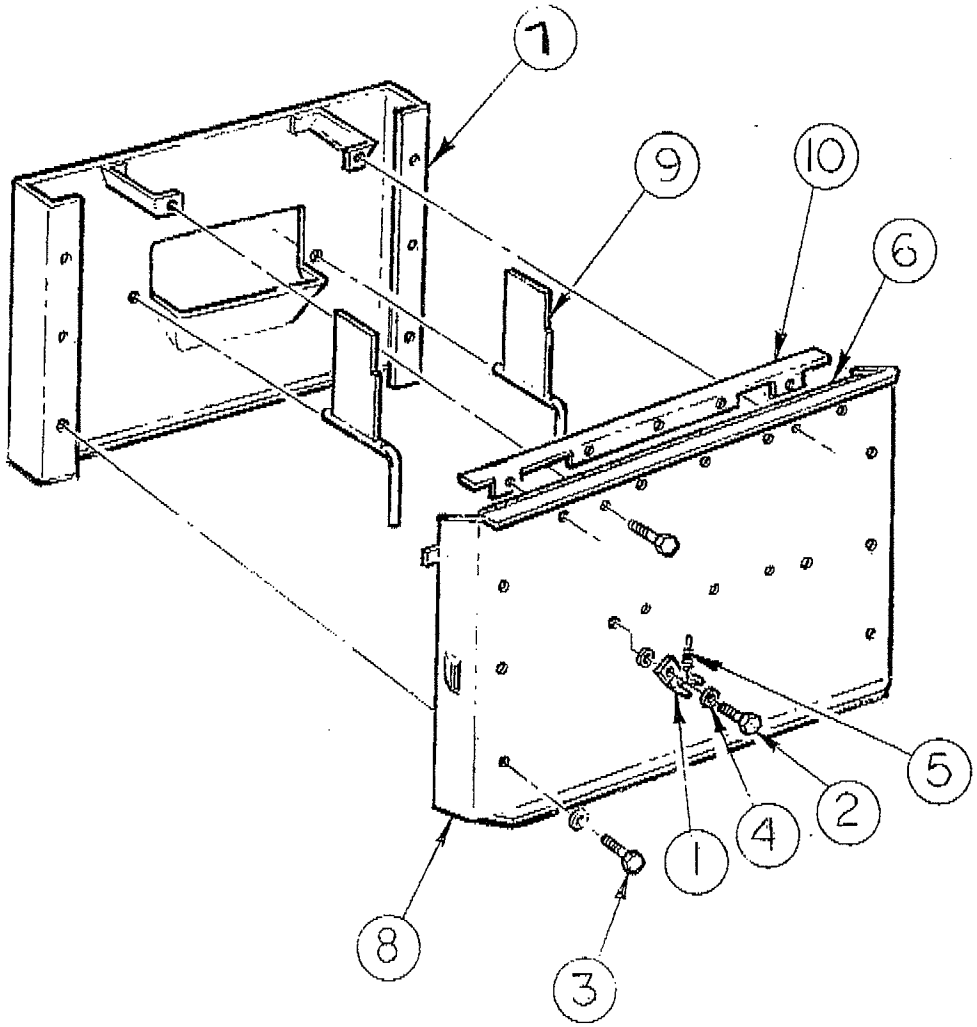

DOOR AND CHUTE ASSEMBLY

ITEM	PART NO.	DESCRIPTION	QUAN.
	9200-0236	Door — Complete Ass'y.	
1	1119-6270	Bracket — Valve Handle Toggle	2
2	6548-3317	Machine Screw-Hex Hd. — 1/4 - 20 x 3/4'' — Plated	2
3	6568-3812	Machine Screw-Hex Hd. — 5/16 - 18 x 1/2'' — Plated	8
4	6640-3300	Flat Washer — 1/4'' — Plated	4
5	7000-8004	Spring	2
6	8001-4002	Polyeurathane Tape — 3/8'' x 1/2''	90''
7	9000-0103	Mill Plate Welded Assembly	1
8	9000-0129	Mill Door Welded Assembly	1
9	9000-0130	Valve Welded Assembly	2
10	1120-3370	Angle — Reinforcing	1

12
97
62
05
HAVE

92000204
OLD D-MILL
CHUTE/DOOR ASY

180